FP200

Dimensional Drawing

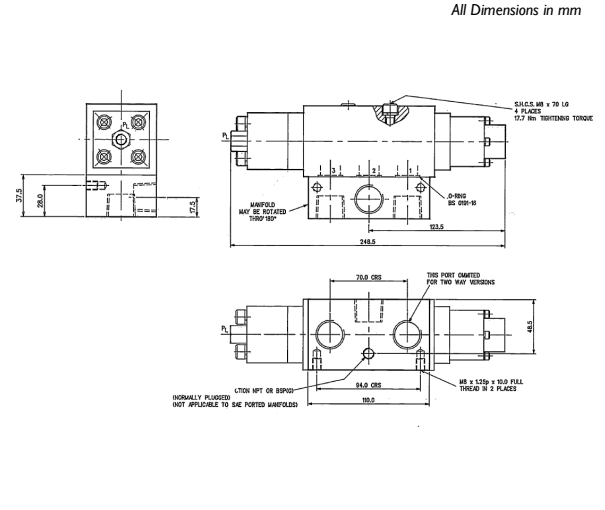

Schematic

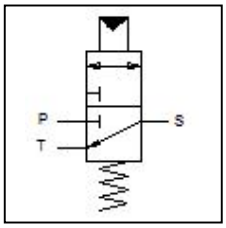

Rendering

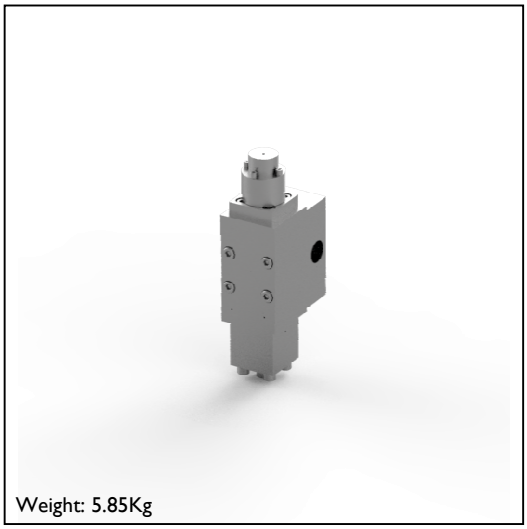

Weight: 5.85Kg

FP200/H2/M/32/S/[M141]

FP200 Interface valve, 200 lpm	**Model Code**
H2 110-235 bar Pilot	**Operator**
M Subbase mounting	**Connections**
32 3-way, 2-position	**Configuration**
S Nitrile -20°C to +130°C	**O-ring Material**
N/A	**Thread Form**
[M141] 3 Way 2 Position Manifold 1/2 NPT	**Manifold**
FP200 /H2 /M /32 /S /[M141]	**Model Number**

This is a bespoke datasheet. For further details on the complete range, please refer to catalogue:
FP50, FP100, FP200 Series Interface / Pilot

www.bifold.co.uk

Accuracy of information
We take care to ensure that product information in this catalogue is reasonably accurate and up-to-date. However, our products are continually developed and updated so to ensure accurate and up-to-date information please refer to the product catalogue issue list on our web site or contact a member of our sales team.

When selecting a product, the applicable operating system design must be considered to ensure safe use. The products function, material compatibility, adequate ratings, correct installation, operation and maintenance are the responsibilities of the system designer and user.

Quality Assurance
All Bifold products are manufactured to a most stringent QA programme to ensure that every product will give optimum performance and reliability. We are third party certified to BS EN ISO 9001:2008. Functional test certificate, letter of conformity and copies of original mill certificates, providing total traceability are available on request, to BS EN 10204 3.1 where available. We reserve the right to make changes to the specifications and design etc., without prior notice.

Bifold® is a member of the Bifold® Group of companies

© Bifold 2016