Any non-compliance shall obligate the violator to compensate for damages. In case any patent is issued or a utility model is registered, or in case of any other industrial property rights, all such rights must be reserved for us.

BEDIA Motorentechnik GmbH & Co.KG, Altdorf bei Nürnberg

ⓐ Technical data

Medium	water, coolant
Function	minimum - operating current (oc)
Operating voltage	12 / 24 V (-25% / +50%) (9 - 36 VDC)
Current consumption	< 8 mA
Output	low side switch ≤ 1 A over the whole temperature range short-circuit and overload protected over the ambient temperature range. At inductive loads freewheeling diode e.g. 1N4007, has to be mounted at the load.
Mounting thread	M18x1,5
Function control	2 seconds ± 5%
Fault indication delay	7 seconds ± 5%
Connection	connector bayonet 16S
Housing material	CuZn38Pb2 EN12164; CW608N capacitive connected to ground
Probe coating	Tefzel® ETFE
Probe protection	IP 67 to DIN40050
Weight	approx. 100 g
Marking	manufacturer; type; manufacturer no.; ⓑ SN; year / week; approval
Switch point hysteresis	< 3 mm
Medium temperature	-40 °C to +125 °C (-40 °F to +257 °F)
Ambient temperature	-40 °C to +125 °C (-40 °F to +257 °F)
Storage temperature	-50 °C to +125 °C (-58 °F to +257 °F)
Mounting position	optional
Reverse polarity protection	inbuilt between positive and negative terminal

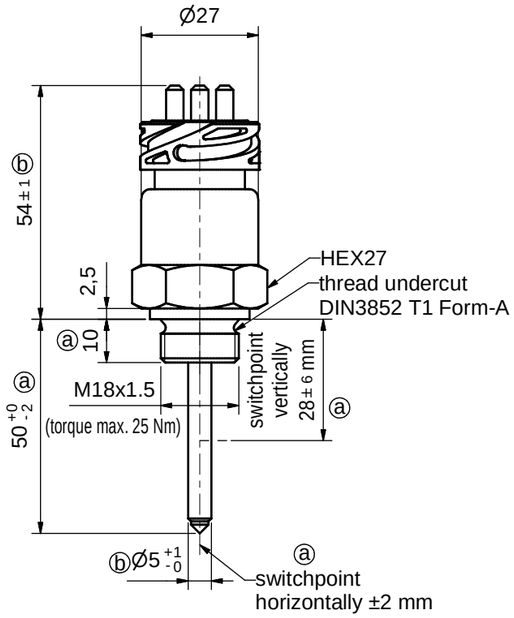

ⓐ Block diagram

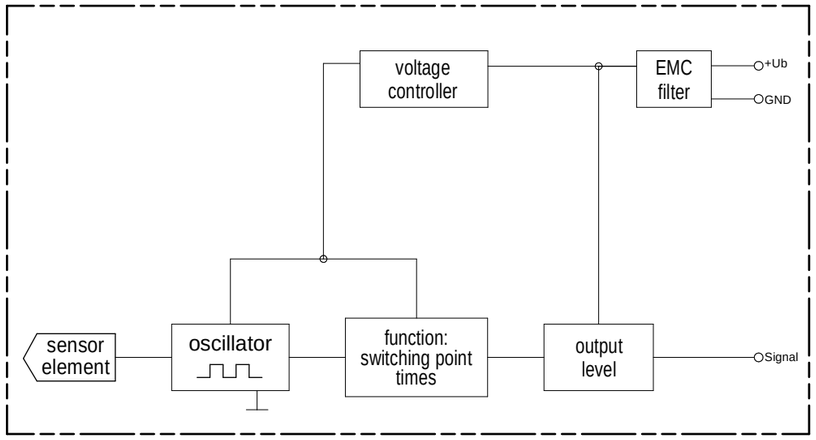

Functional diagram for MINIMUM Probes ⓑ

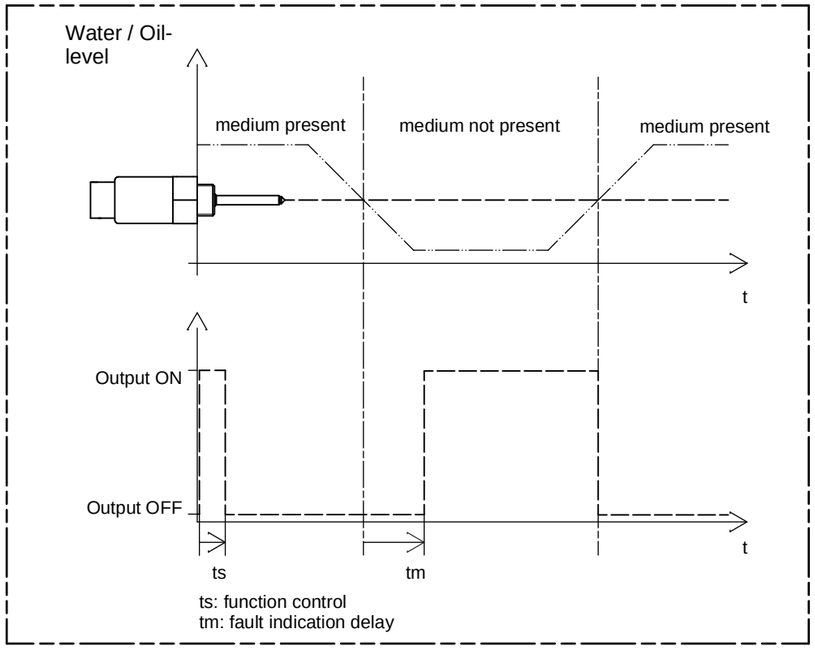

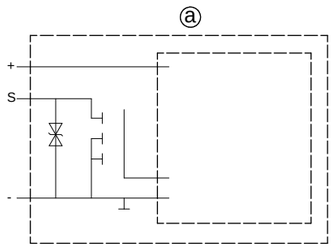

Caution!!
Do not connect negative potential to signal terminal of the sensor and positive potential to negative terminal of the sensor.

Approval	e1 035459	
Customs tariff number	90261029	

Environmental simulations

Vibration	ISO 16750-3:2007	10 Hz - 2000 Hz 20 g
Free Fall	IEC 16750	
Mechanical Shock	DIN EN 60068-2-27:1995; 100 g / 11ms	
Dry Cold	DIN EN 60068-2-1:2006; -40 °C / 24 h (-40 °F / 24 h)	
Dry Heat	DIN EN 60068-2-2:2008; +125 °C / 96 h (+257 °F / 96 h)	
Temperature cycling	DIN EN 60068-2-14:2000	
Damp Heat	DIN EN 60068-2-78:2002	
Damp Heat, steady state	DIN EN 60068-2-30:2006	
Salt spray	DIN EN 60068-2-52:1996	
Pressure resistance	2,5 MPa (25 bar / 362,6 psi) (25°C / 77°F / 1 h)	

EMC

Radiated emission	2004/104/EG	30 MHz - 1 GHz; 1 m
Conducted transient emission	ISO 7637-2:2004	
Immunity to RF electromagnetic fields	ISO 11452-1/-2	1000 MHz - 2000 MHz; 150 V / m (rms)
Immunity to RF electromagnetic fields in the stripline	ISO 11452-1/-5	20 MHz - 1000 MHz; 150 V / m (rms)
Transient immunity test on power lines	ISO 7637-2/2004	Impulse 1, 2a, 2b, 3a, 3b, 4

For this level sensor with surpressor diode between sensor output (S) and minus contact the supply voltage of the switching load has to be 7,5 V or less. At a higher voltage than 7,5 V the current of the diode must be 10 mA or less. If the supply voltage is higher than 7,5 V and the current of the diode is higher than 10 mA the sensor is not short-circuit proof.

rev.	modification	date	name/checked by
b	revised	03.05.11	BerVi/SasCh
a	revised	10.03.10	MoeMi/SasCh

field of application

admissible tolerance: ISO2768-mK

surface

	date	name
created by	05.12.2007	MoeMi
checked by	05.12.2007	ZibGu

scale 1:1 | position – | amount –

description
CLS-40 water level sensor
low side switch - operating current
with connector bayonet 16S

drawing number 321563

sheet 1/1

drawing path: I:\CAD\321\321563US.idw

The copyright to this drawing belongs to us. No duplication or transfer to, providing access to or communicating to any third parties is allowed of its contents or excerpts thereof. This drawing may not be used without our approval for any purpose other than that for which it has been entrusted to the recipient.